SENSOR & JACKET

Miniator sensor jacket with nonmagnetic material for your cryostat & other low temperature experiment

Cryogenic Sensor by Jacket

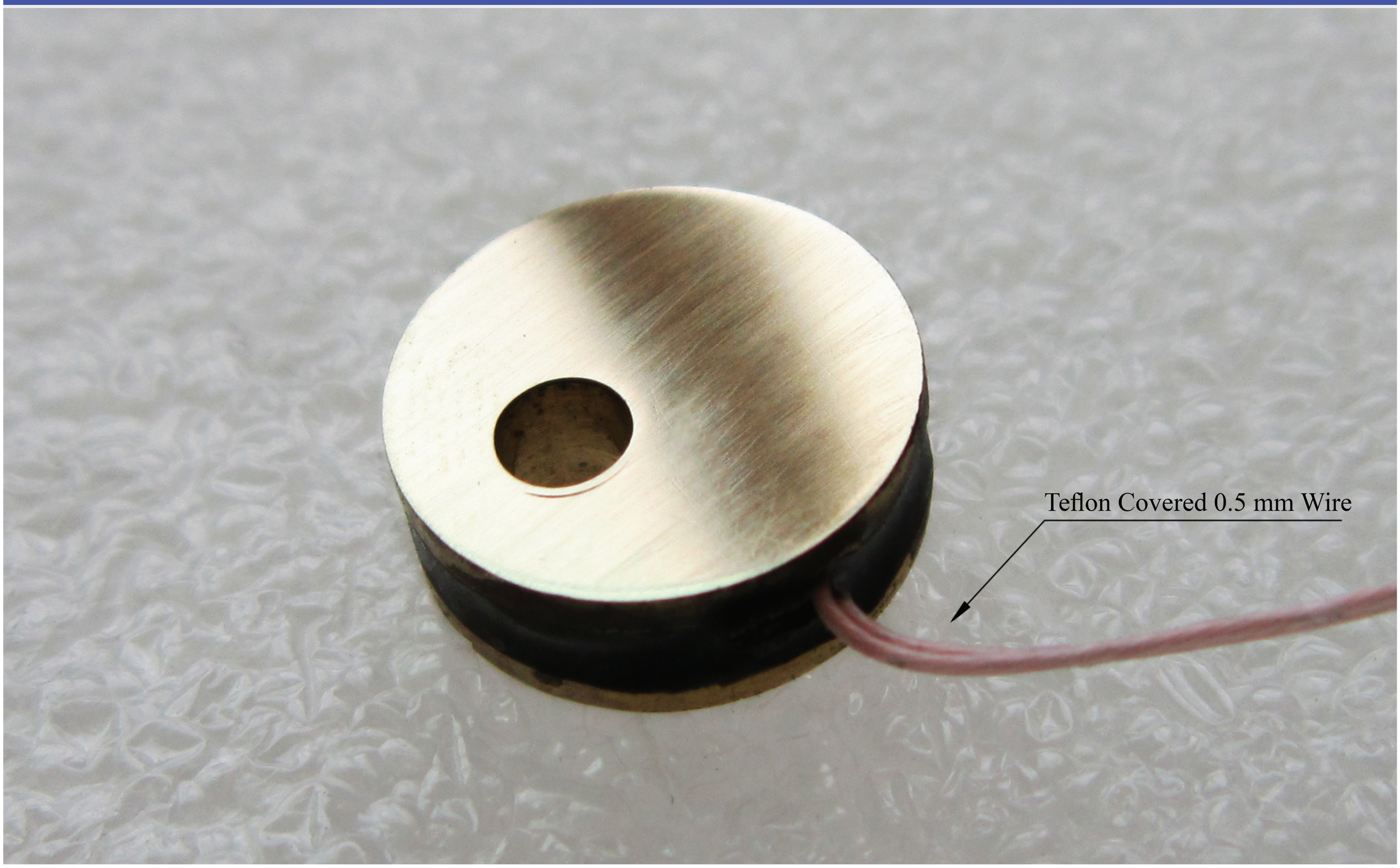

Specification:

Temperature rang (K) ..... 20 to 400

Stability (K) ..... ± 0.5

Materials ..... Nonmagnetic

Weight (gr) 6.0

Wires thickness (mm) 0.5

*Wire tensile strength (A*MPa = kg) 5*
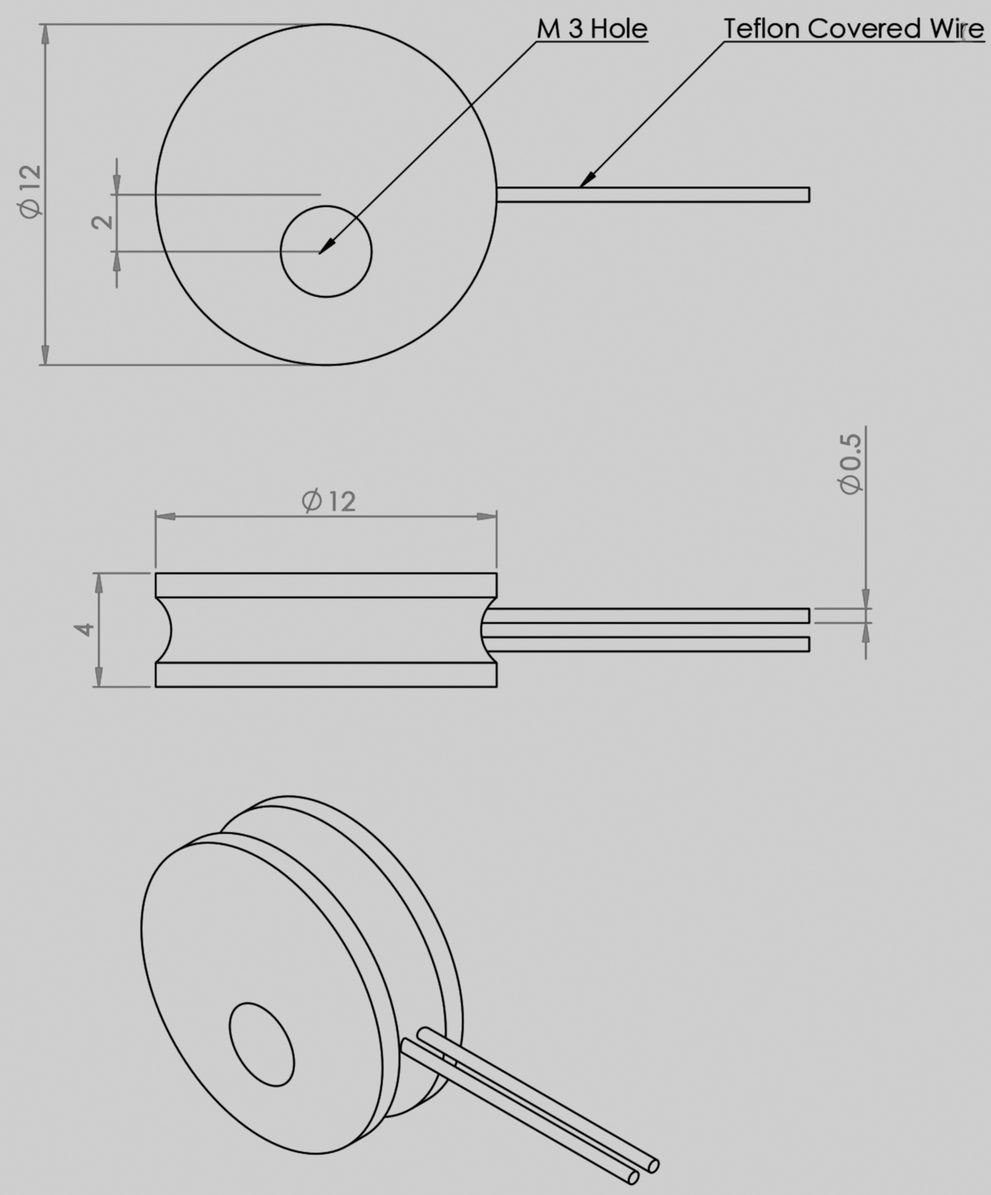
Response Time (s) 3